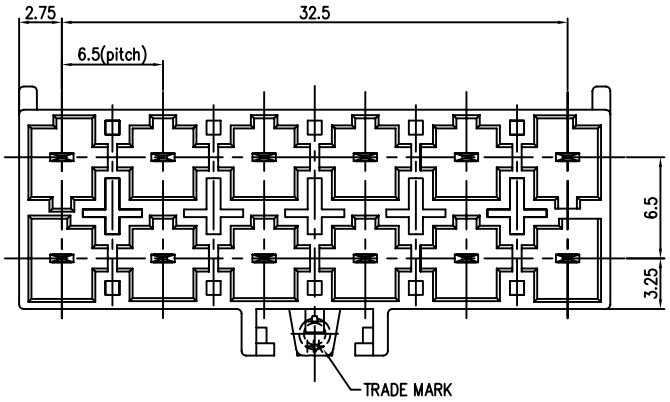

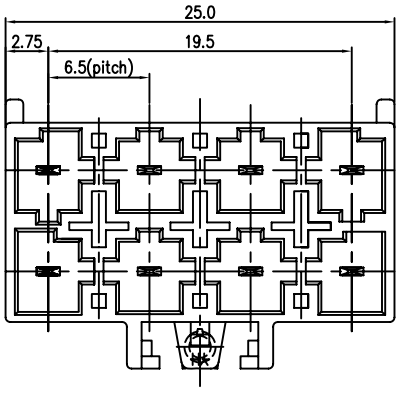

08PIN

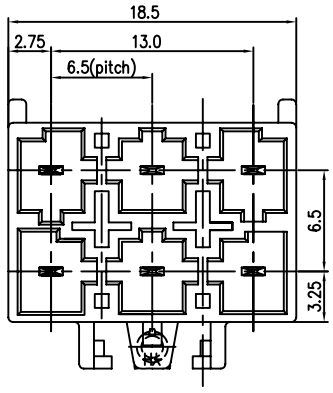

06PIN

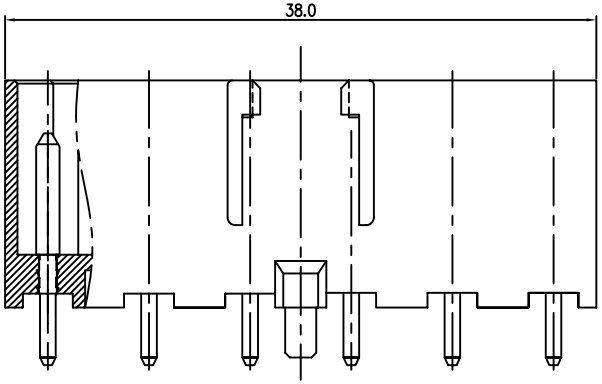

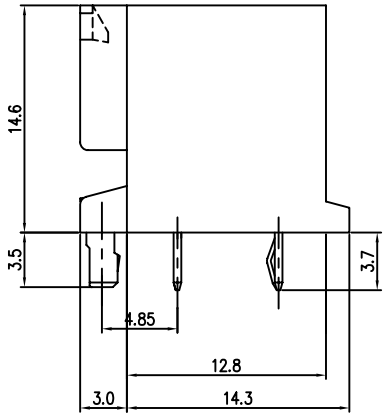

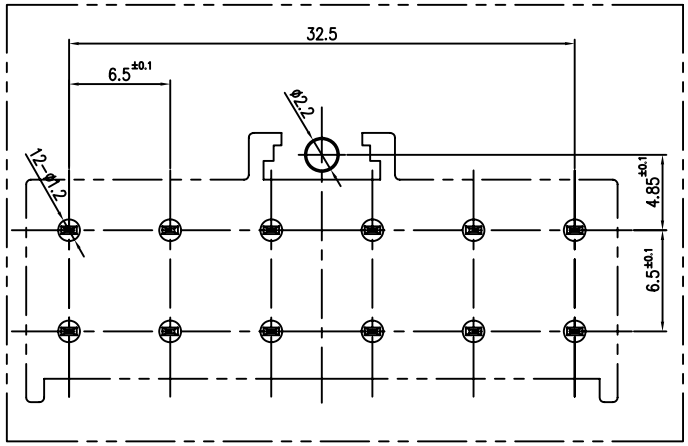

P.C.B LAYOUT

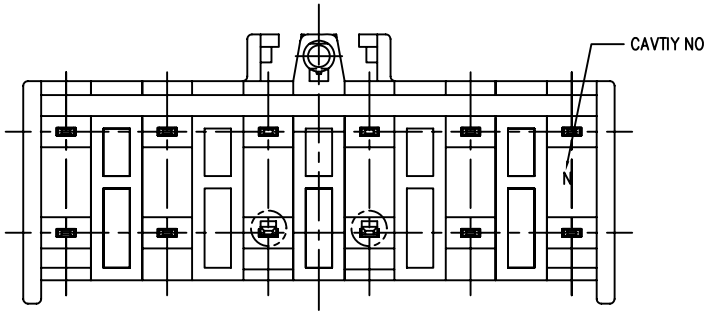

LTR	REVISION RECORD	DATE	DR	CHK

YEONHO ELECTRONICS CO., LTD.

SCALE	DRAWN	DESIGN	CHECK	APPD
4/1				

TITLE: 65001WS-12

SIZE	DWG. NO	REV
A2	65001WS-12-S	03