NO. OF POS.	PARTS NO.	A	B
1	YFH500-01	6.3	–
2	YFH500-02	12.0	–
3	YFH500-03	17.0	5.0
4	YFH500-04	22.0	10.0
5	YFH500-05	27.0	15.0
6	YFH500-06	32.0	20.0

[ABOVE 3P]

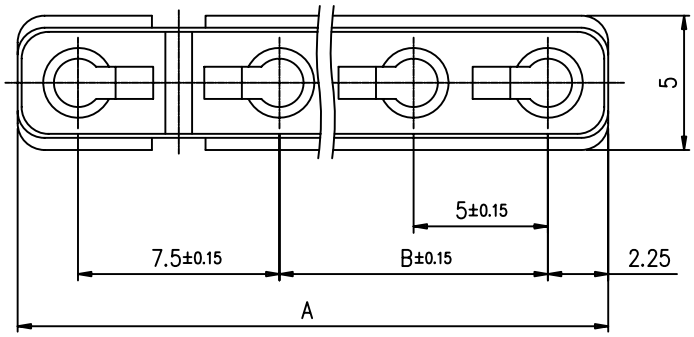

[2P]

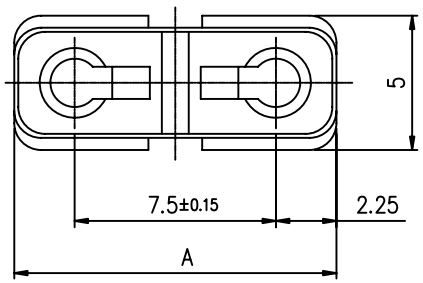

[1P]

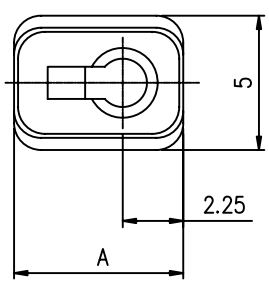

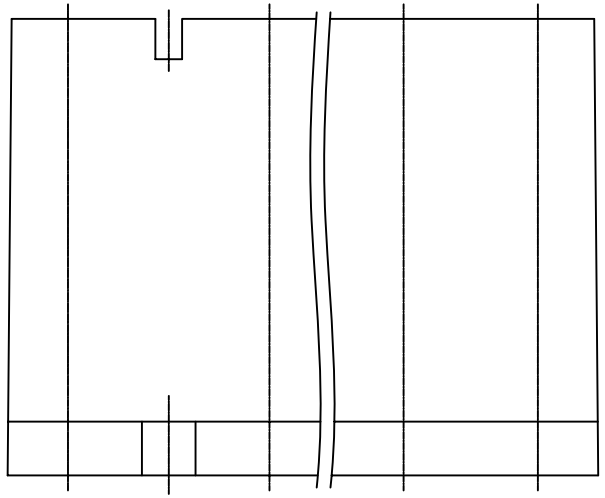

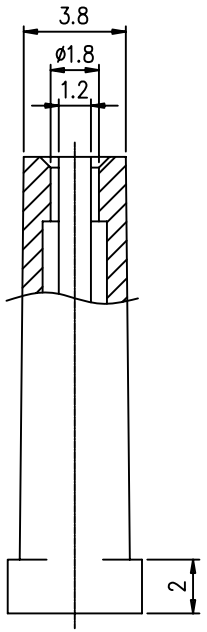

LTR	REVISION RECORD	DATE	DR	CHK

YEONHO ELECTRONICS CO., LTD.

SCALE	DRAWN	DESIGN	CHECK	APPD
5/1				

TITLE: YFH500-NN

SIZE	DWG. NO	REV
A3	YFH500-00A-S	