

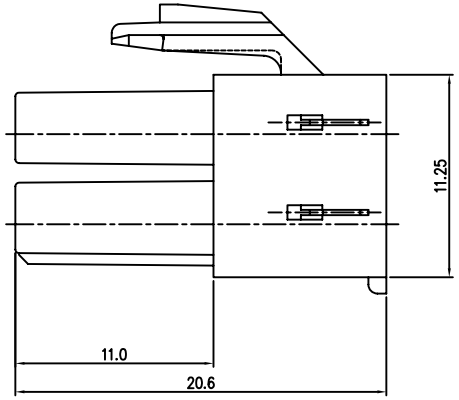

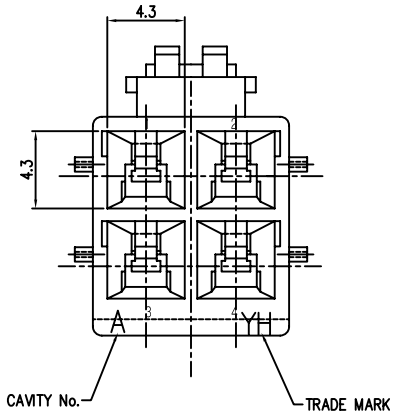

LTR	REVISION RECORD	DATE	DR	CHK

YEONHO ELECTRONICS CO., LTD.					TITLE: YH500-NNB	
SCALE	DRAWN	DESIGN	CHECK	APPD	SIZE	DWG. NO	REV
5/1					A2	YH500-00B-S	